Patio Spring Latch/Dead Bolt—Exterior

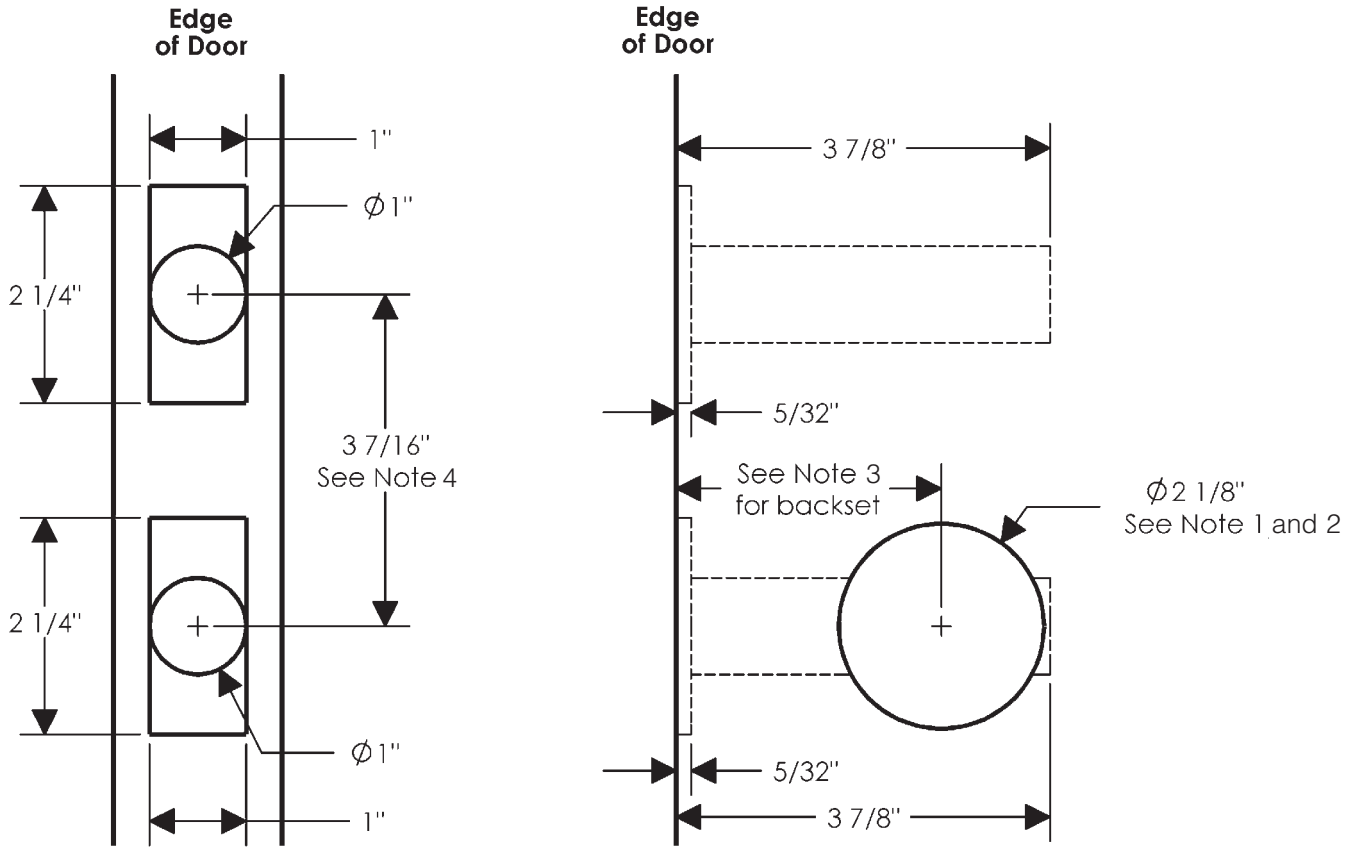

Notes:

1. This face bore does not work for E101, E103, E201, E202, E204, E205, E206, E230, E415, E416, E417, E418, E589, E820, E10820, E10871, E30802, and E30803. These escutcheons require a 7/8” face bore.
2. This face bore does not work for E10015. This escutcheon requires a 1 5/8” face bore offset 1/8” down from center of spring latch.
3. This bore specification is applicable for 2 3/8” or 2 3/4” backset spring latches/dead bolts.
4. This center-to-center dimension may change with escutcheon selection.

ROCKY MOUNTAIN® HARDWARE
1020 Airport Way Hailey, Idaho 83333 USA
toll free 888.788.2013 • ph. 208.788.2013 • fax 208.788.2577
info@rockymountainhardware.com
www.rockymountainhardware.com